apollo DRF

Remote Controlled RF table for Flat Panel Detector

Product Data

Movements

Tilting	Motorized, -90°/+90°. Two user selectable speeds: 4.5 or 6.5°/s (speed can be changed at installation). Automatic stop in horizontal position
Elevating tabletop	Motorized, max run 68 cm (26.8") Speed 2,5 cm/s (1 inch/s) (can be changed at installation)
Transversal tabletop movement	Motorized, 32 cm = ± 16 cm (12.6" = ± 6.3"). Maximum speed 5 cm/s (2 inches/s) with soft start/stop for maximum patient comfort. Automatic centering
Longitudinal tabletop movement	The complete patient coverage is guaranteed by the large travel of the tube / detector assembly, not requiring any longitudinal tabletop movement for the maximum patient comfort and safety
Tube column - detector group movement	Motorized, 160 cm (63"). The movement starts slowly for accurate adjustments and increases according to an acceleration step to quickly cover long distances. Maximum speed 20 cm/s (7.9 inches/s)
Patient exploration	203 cm (80") thanks to the movement of the tube/detector group only, without patient repositioning
Tube column tilting	Motorized, ± 40°. Speed 11°/s (can be customized at installation). Automatic centering of target organ during oblique projections in fluoroscopy. Possibility to perform oblique exposures at both edges of the tabletop. Automatic centering
SID (Source to Image Distance)	Motorized, 110 - 180 cm (43.3" – 70.9") with continuous adjustment. Speed max 4 cm/s (1.6 inch/s)
Tube rotation	Manual -90°/+180°. Starting from 0° position, the mechanical stops are at ± 15° and ± 30°, then every 10°
Focal spot to floor distance (with table in vertical position)	44 - 204 cm (17.3"- 80.3") without column tilting

Flat surface tabletop

Maximum patient weight	Up to 284 kg (627 lbs), without any movement limitations
Dimensions	237,5 x 74 cm (93.5" x 29.1")
Radio-transparent area	235,5 x 55 cm (92.7" x 21.7")
Tabletop height from floor	56 – 124 cm (22" – 48.8") (measured at tabletop center with standard under-floor installation plate)
Surface	Flat, totally smooth without raised edges
Material	Microsandwich: carbon fiber + Rohacell® + HPL
X-ray attenuation	≤ 0.5 mm Al @ 100 kVp, HVL = 3.6 mm Al
Minimum distance between central X-ray beam and tabletop edges	39 cm (15.4") both sides
Minimum distance between detector and tabletop edge	17 cm (6.7")
Skin to detector distance	11,4 cm (4.5")

Flat surface "Open" tabletop (option)

Type	Single side suspended tabletop
Maximum patient weight	Up to 230 kg (507 lbs) distributed along the tabletop length, without any movement limitations
Dimensions	235,5 x 74 cm (93.5" x 29.1")
Radio-transparent area	221 x 55 cm (87" x 21.7")
Tabletop height from floor	54,5 – 122,5 cm (21.5" – 48.2") (measured at tabletop center with standard under-floor installation plate)
Surface	Flat
Material	Carbon fiber
X-ray attenuation	≤ 0.3 mm Al @ 100 kVp, HVL = 3.6 mm Al
Minimum distance between central X-ray beam and tabletop edges	39 cm (15.4") both sides
Minimum distance between detector and tabletop edge	17 cm (6.7")
Skin to Detector distance	9,9 cm (3.9")

Detector housing

AEC measuring chamber	The system is provided with a solid state 3-field measuring chamber
Multi-Grid system	Multi-Grid system automatically selects and inserts inside the X-ray field one of two available antiscatter grids, according to the examination protocol selected through the digital acquisition system. Grid features: - Grid 1: f=120 cm (43") for general rad exams, 12:1, 80 L/cm (203 L/inch) - Grid 2: f=180 cm (72") for chest exams, 12:1, 80 L/cm (203 L/inch) The grid can be also automatically parked out of X-ray field when it is not needed, for example for pediatric and extremity exams, in order to reduce the dose to the patient
Grid movement	Stationary grid, optimized for use with Flat Panel detector, with possibility to configure it as oscillating

Collimator

Interface	7" LCD colour touch screen, 800 x 480 pixel, 16:9
Functions	Controls for transversal tabletop movement, column longitudinal movement and column tilting, SID setup, manual adjustment of collimated area, selection of additional filtration
Displayed information	SID, column tilting, collimated area, additional filtration, icon for X-ray emission. The interface automatically changes its orientation (portrait/landscape) according to the rotation of the X-ray tube
Collimation	Square and rectangular
Number of shutters	6 pairs of shutters (Fe + Pb), including near-focus shutters
Adjustment	Automatic with SID compensation, microprocessor controlled
"Hold" function	The position of the diaphragms set during fluoro is maintained when switching to exposure
Field coverage	48x48 cm @ SID = 100 cm (18.9"x18.9" @ SID = 39.4")
Collimator filtration	Minimum 2 mm Al eq @ 100 kV, HVL = 3.6 mm Al
Stray radiation	≤ 40 mR/hr @ 150 kVp, 4 mA
Light source	LED source with automatic switch-on when moving column, tabletop, SID, collimator. Automatic switch-off after 30 s
Additional filtration	Automatic and manual selection. Values of added filtration: 1 mm Al + (1 mm Al or 0.1 mm Cu or 0.2 mm Cu)
Total filtration (tube + housing + collimator)	≥ 2.7 mm Al eq. @ 100 kV
Camera for patient positioning	A colour camera integrated in the collimator allows the live visualization of patient on the table and its positioning without X-ray emission. The images are displayed on touch screen control console
Collimator rotation	A flange allows the ± 90° collimator rotation
Internal slot for DAP meter	The collimator has an internal slot for the installation of DAP meter (in option)

Functions

Movement orientation selection	The movements associated with the joystick for the control of the column longitudinal movement and the transversal tabletop movement can be changed according to the orientation selected by the operator: "monitor view" to coordinate the joystick's movements with the motion of the image displayed on the monitor, and "table view" to coordinate the joystick's movements to the actual table movement
Controls on touch screen console	Table movements, collimator, tomography, compressor, fluoroscopy parameters
Tableside controls	Table tilting, tabletop transversal and lift, column scanning and tilting, SID adjustment, collimator lamp switch on/off
X-ray control	Footswitch for fluoro and rad exposures, with two-step pedal for fluoro image store. Pushbutton on generator console for exposure. Two-step pushbutton for exposure (option)
Automatic positioning	According to the predefined examination procedure, the system automatically sets: table tilt, column angulation, longitudinal column/detector position, transversal tabletop position, source-detector distance, collimated area, grid, additional filtration
Intercom system	The control console is provided with an intercom device allowing operator talking/listening to the patient from the command room, while the patient is placed on the table. Automatic voice messages are available, selectable among 3 languages chosen at installation, for RAD procedures. Available languages: English, French, Spanish, Italian, German, Russian, Arabian, Chinese. Some languages may be available both with male or female voice. Example of set messages: "Take a big breath - Hold your breath", activated during PREP phase; "You can breathe", activated after X-rays go OFF or if PREP and/or RAD command is released
Applications	Fluoroscopy, radiographic exposure, tomography, angiography (option), stitching (option), tomosynthesis (option)
Projections	Perpendicular, oblique, on gurneys or wheelchairs, on chest stand (option)
Tomoscopy	The organ remains centered when taking oblique projections during fluoro
Fault indication and memory	Fault conditions are visualized with codes and text messages on the display. An internal memory stores the history of faults and equipment conditions

Touch screen console

Interface	12" LCD colour touch screen, 800 x 600 pixel, 4:3
Brightness	> 300 cd/m^2
Contrast	450 : 1
Colours	65.536
Viewing angle	>35° (↑) / >55° (↓) / >60° (←) / >60° (→)
Smart-touch joysticks	Except the joystick for collimator control, the console is equipped with four smart-touch joysticks for control of Apollo DRF's functions and movements. Smart-touch joysticks are activated by human touch to avoid unintentional movements of the equipment
Pushbuttons	Emergency red pushbutton, PREP and RAD pushbuttons for exposure control

Joysticks on the touch screen console

For Apollo DRF version, the joystick functions are arranged as follows:

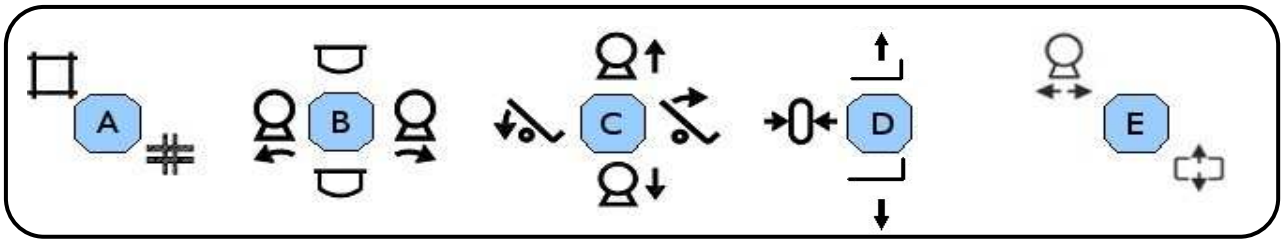

Key	Functions	
A	Collimator regulation	
B	← → : column tilting	↑ ↓ : compressor movement
C	← → : tabletop tilting	↑ ↓ : SID adjustment
D	← : auto centering	↑ ↓ : tabletop height adjustment
E	← → : column/detector group horizontal movement ↑ ↓ : tabletop transversal movement (can be inverted according to the selected orientation)	

Note: A, C and E joysticks have 8-way movement.

Compressor

Compression	Motorized, remote controlled
Compression force	3 kg (6.6 lbs) to 15 kg (33.1 lbs) step 0.5 kg (1.1 lbs)
Useful distance between compressor and tabletop	10 ÷ 35 cm (3.9" ÷ 13.8") for standard tabletop 11,5 ÷ 36,5 cm (4.5" ÷ 14.4") for Open tabletop
Compression cone	Removable, made of radiotransparent plastic
Compressor parking	When not in use, the compressor is automatically parked behind the tube for maximum patient safety
Securities	Both software and hardware securities. Quick unhook in case of blackout

Tomography

Tomographic technique	Linear tomography with arc-plane movement, fully electronic (without connection bar)				
Table positions for tomography	Tomography can be performed in every table position				
Angles	7°, 20°, 30°, 45°				
Speeds	4 speeds, from 11.2 to 22.4°/s (can be changed at installation)				
Direction	Bi-directional, left-right or viceversa, user selected				
Layer height respect to tabletop	Electronic adjustment 0 ÷ 350 mm, 1 mm step (0 ÷ 13.8", 0.04" step)				
Automatic sequences	Sequences of tomo images with automatic layer position increase and bi-directional movement, without stopping the movement between exposures				
Source to Image Distance	114 cm (44,9")				
Tomography times (in seconds)	Angle	1st speed	2nd speed	3th speed	4th speed
	7°	0,6	0,5	0,4	0,3
	20°	1,7	1,3	1,1	0,8
	30°	2,5	1,9	1,7	1,2
	45°	3,7	2,8	2,5	1,7

Tomosynthesis (option)

Tomosynthesis function	Starting from a series of 60 projections acquired at different angles, the tomosynthesis function allows to reconstruct a series of slices parallel to the tabletop plane
Table positions for tomosynthesis	Tomosynthesis can be performed in every table position
Tomosynthesis scan angle	40° (± 20°)
Acquisition speed	8 frame/s with Thales RF4343 detector 6 frame/s with Thales RF4343FL detector
Acquisition time	7.5 s with Thales RF4343 detector 10 s with Thales RF4343FL detector
Number of acquired images	60
Direction	Bi-directional, left-right or viceversa, user selected
Layer height (geometric position of central slice of reconstructed volume respect to table)	0 ÷ 350 mm, 1 mm step (0 ÷ 13.8", 0.04" step)

Stitching (option)

Stitching function	The stitching function allows the acquisition of a series of images of a wide anatomic part, which are then joined together in a single image in a completely automatic process. This function is typically used for full leg and full spine exams
Number of steps	2, 3, or 4 based on the anatomic program
Step length	30 cm
Reconstructed image size	2 steps: 43x60 cm, 3 steps: 43x90 cm, 4 steps: 43x120 cm
Directions	Right-left /left-right
Focus distance	Can be set at installation: 140 cm to 180 cm
Number of programs	60 (10 programs for each direction/n° of steps combination)
Accessories	Stitching package includes a radiopaque ruler and an arm support for exam in lateral projection

Accessories

2 handgrips	Standard. They can be fixed in any position along the tabletop
Footrest	Standard. It can be fixed along the tabletop every 100 mm (4") steps
Head and shoulder rest	Option. It can be fixed in any position along the tabletop
Couple of urological/ gynecological leg supports	Option. They can be fixed in any position along the tabletop
Compression band	Option. It can be fixed in any position along the tabletop
Lateral cassette support	Option (only with optional overhead tube support). It can be fixed in any position along the tabletop
In-room control console	Option. Complete in-room console on mobile trolley, used to control table movements
Multi-functional in-room control console	Option. Additional multi-functional console on mobile trolley, it is composed of high brightness monochrome monitor, touch screen control console, keyboard, mouse, 10-meter cable and fluoro/exposure footpedal. It can be used to control the table movements and the entire digital processing from within the examination room

Safeties

Collision	All movement are software controlled to avoid collision of any part of the equipment with room floor, ceiling or walls. Room size can be set by software
Single fault	A dedicated microprocessor checks all the operating conditions of the equipment in real time and stops the operation in case of a single failure that might cause unwanted or excessive movements or radiation
Single fault hardware	A circuit disconnects the power from electrical motors in absence of command
High voltage cables	HV cables are fully integrated in the column and are completely invisible and protected with covers
Compressor parking	When not in use, the compressor is automatically parked behind the tube for maximum safety

Electrical features

Power supply voltage	Three phase 380/400 Vac ±10% Three phase 415/480 Vac ±10% (for USA version)
Frequency	50/60 Hz
Absorbed current	Approx. 7A @ 380/400 Vac Approx. 6A @ 415/480 Vac
Absorbed power	6 kVA
Operational heat dissipation	1570 BTU/h (460 W) assuming a 20% duty cycle
Equipment type and classification according to IEC 60601-1	Class I with type B applied parts
Degree of protection according to IEC 60529	IP00
Operating mode	Continuous

Environmental conditions

Operating conditions	Temperature: Humidity: Pressure:	from +10° to +40° Celsius (50° F to 104° F) from 30% to 75% from 700 to 1060 hPa
Conditions for transport and storage	Temperature: Humidity: Pressure:	from -20° to +70° Celsius (-4° F to 158° F) up to 95% non condensing > 630 hPa

Mechanical features

	Size (W x D x H)	Weight
Table - See drawings for further details	242 x 193 x 200 cm (95.3" x 76" x 78.7")	1115 kg (2461 lb) (Table only, without tube, accessories, cables, floor plate)
Electronics cabinet	52 x 55 x 195 cm (20.5" x 21.6" x 76.8")	145 kg (320 lb)
Touch screen console	36 x 36 x 12,5 cm (14.2" x 14.2" x 4.9")	< 5,2 kg (11.5 lb)
Minimum ceiling height for 90/90° tilting	260 cm (108.3") (minimum SID, detector at the centre of table, 0° column tilt)	

Standards and regulations

CE 0051	CE symbol grants the product compliance to the European Directive for Medical Devices 93/42/EEC and its revised versions as a class IIB device
MET c us	c-MET-us approval means that the product meets the requirements of the applicable US and Canadian standards

Dimensions for standard version (mm & inches)

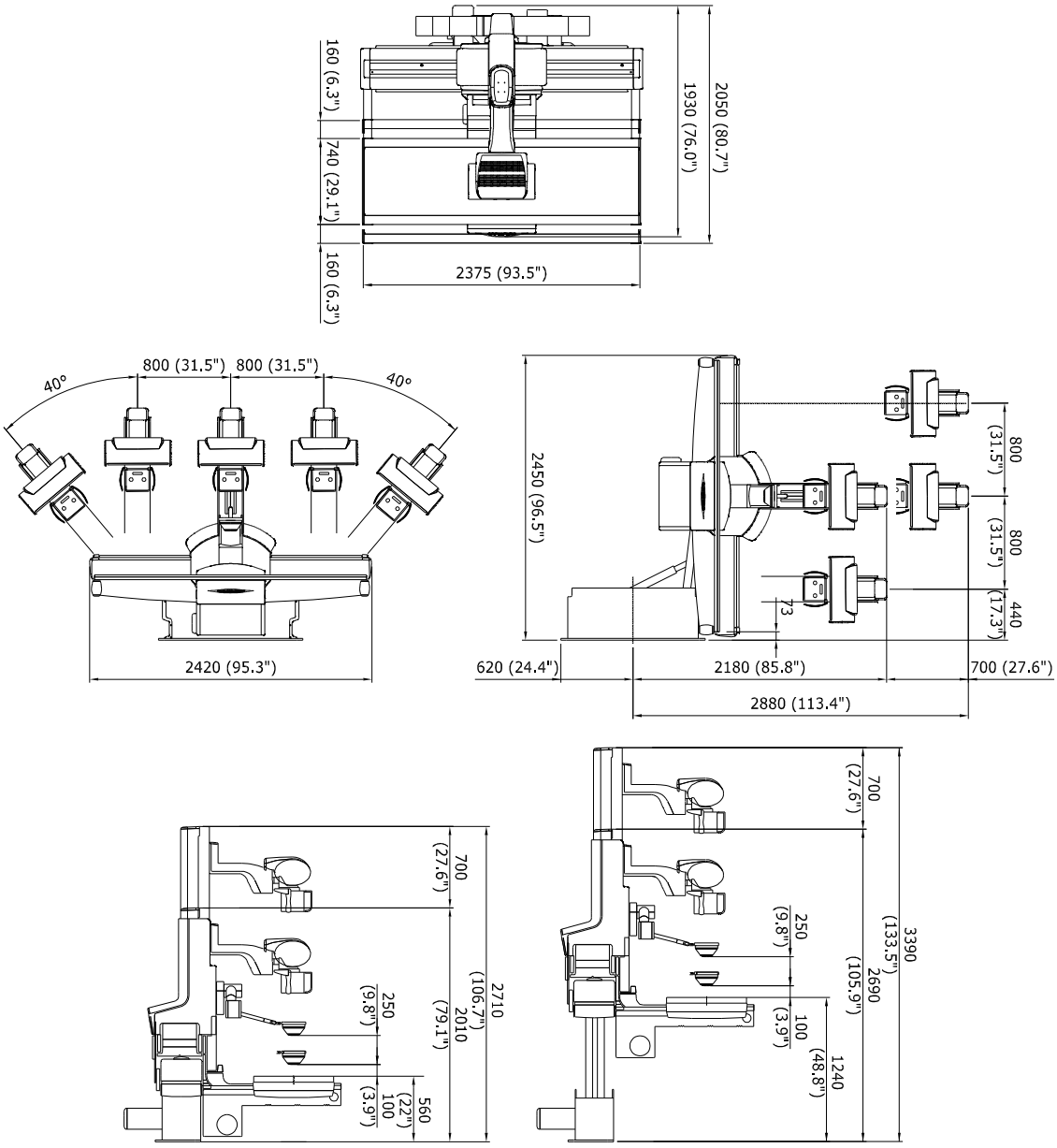

NOTE: Above measures are valid for installation with standard under-floor plate

Dimensions for Open tabletop version (mm & inches)

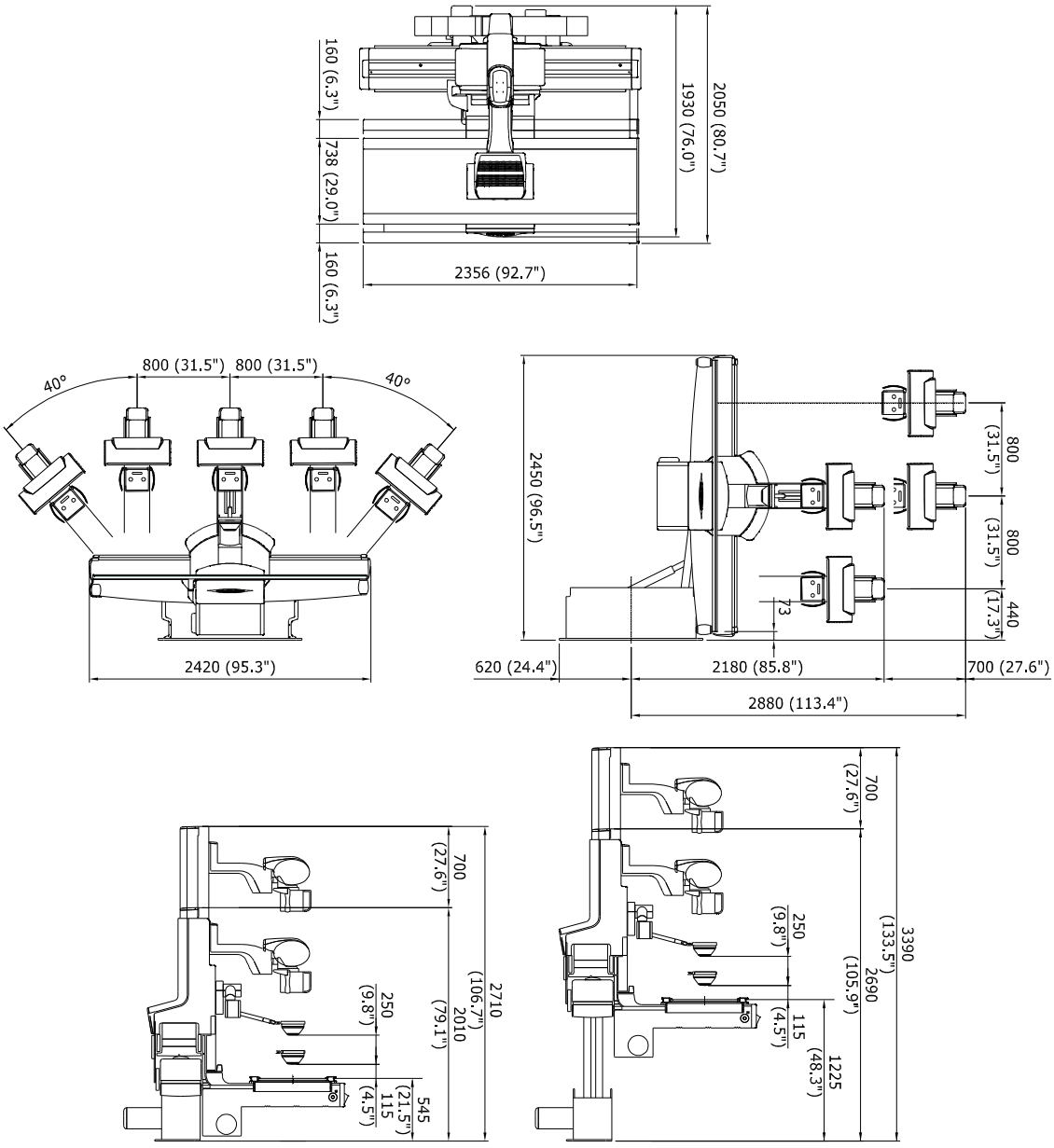

NOTE: Above measures are valid for installation with standard under-floor plate

Note: Products are continuously under review in the light of technical improvements. The actual specification may therefore be subject to improvement or modification without notice.

VILLA SISTEMI MEDICALI s.p.a.
20090 BUCCINASCO (MI) – ITALY,
Via delle Azalee, 3
Tel. +39-02-488591, Fax +39-02-4881844

Company with Quality System certified by

ISO 9001:2015 ISO 13485:2016